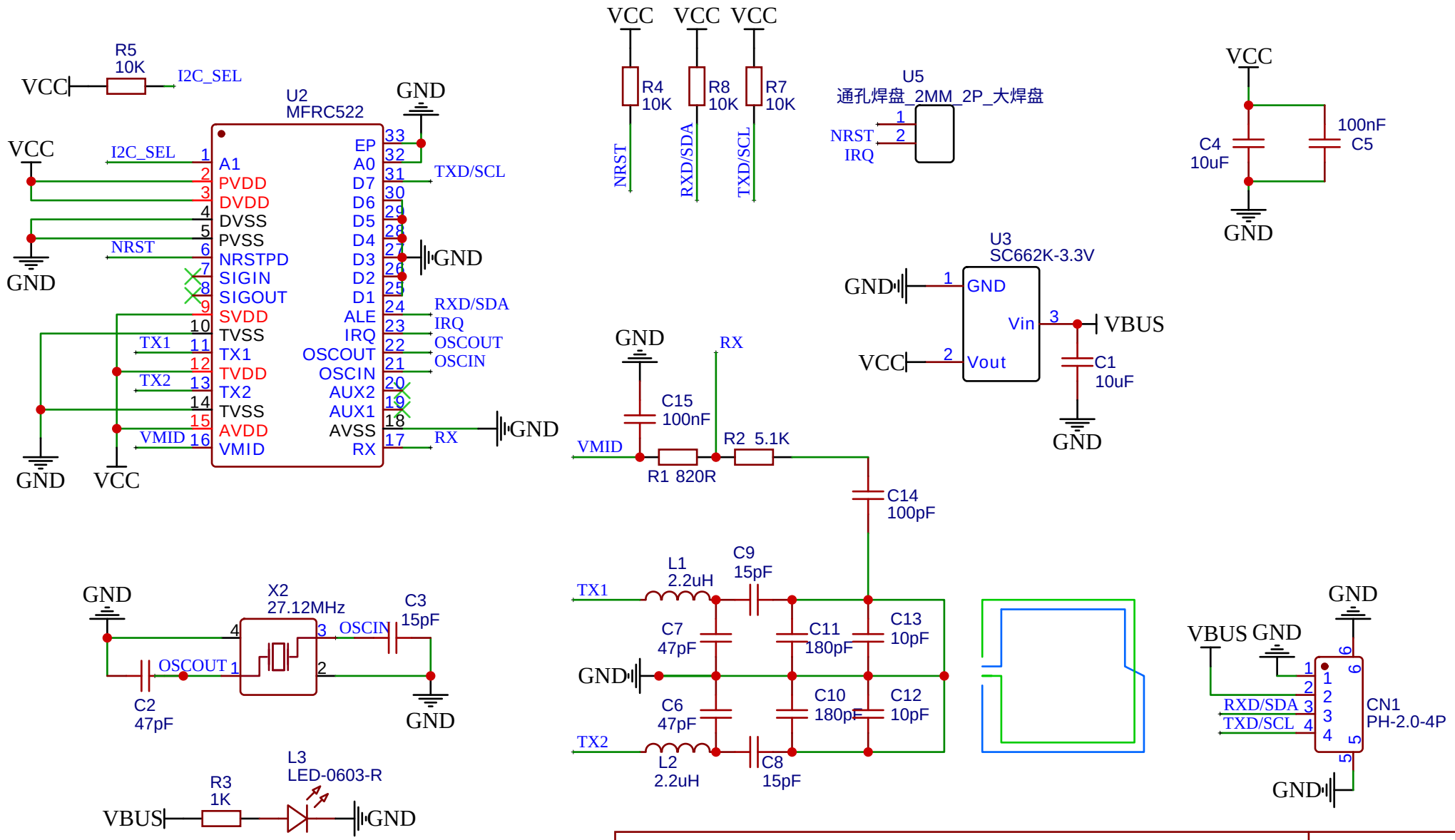

TITLE: Sheet_MFRC522感应读写模块-HS-S62A-PL	REV: 1.0
Company:	Sheet: 1/1
Date: 2025-06-13 Drawn By:	