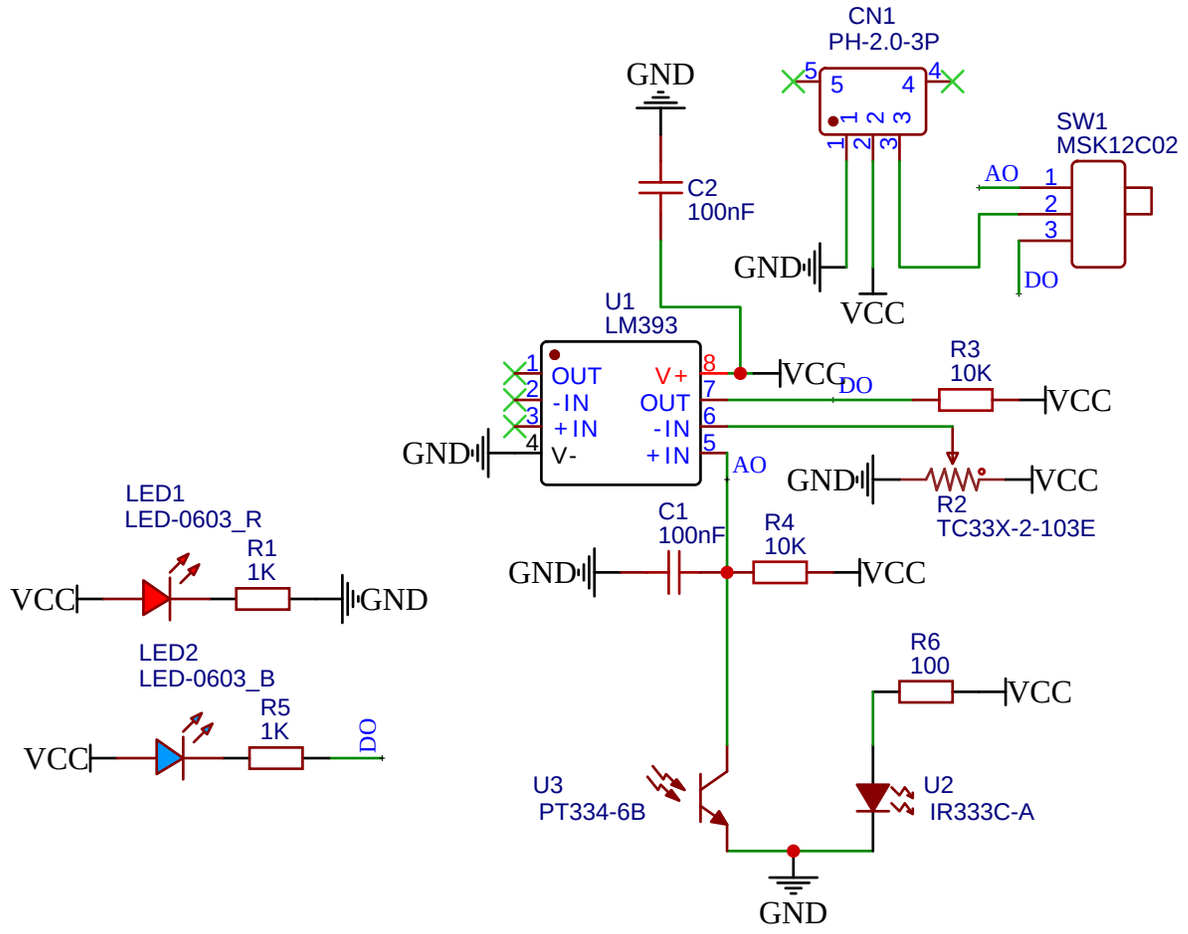

TITLE: Sheet_红外避障模块 HS-S02P		REV: 1.0
	Company:	Sheet:
	Date: 2022-11-18 Drawn By:	