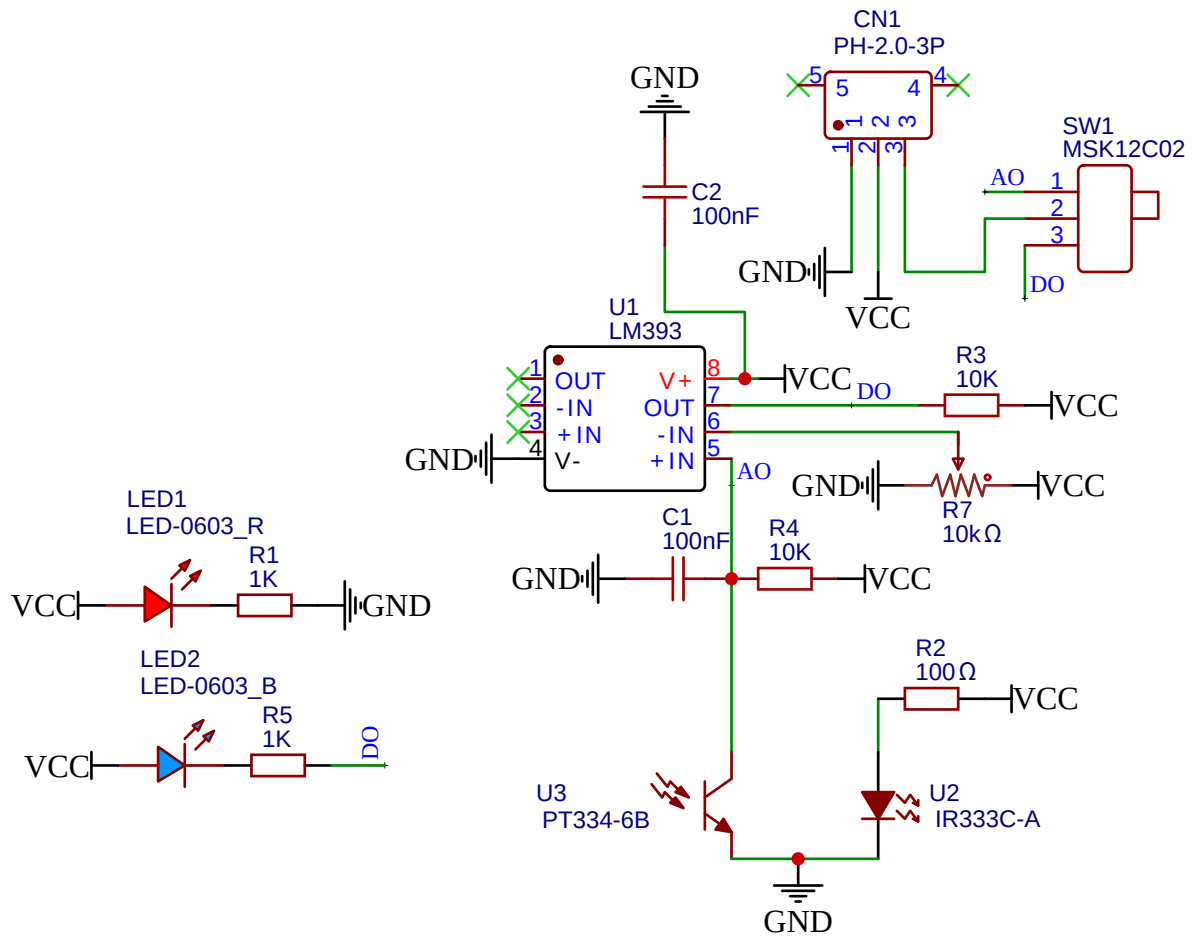


| | | |
|---|---|---|
| TITLE: Sheet_红外避障传感器 HS-S02-L | | REV: 1.0 |
| | Company: | Sheet: 1/1 |
| | Date: 2023-07-31 Drawn By: | |