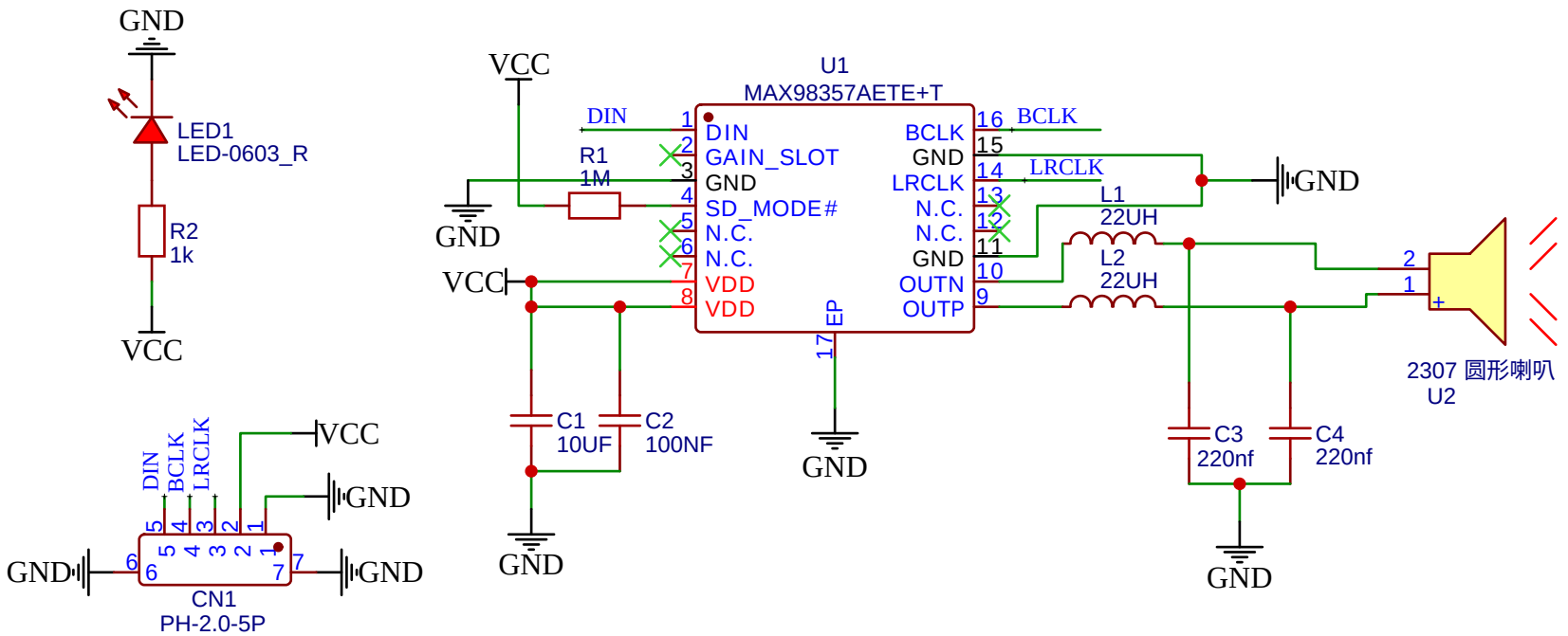


| | | |
|---|---|---|
| TITLE: Sheet_MAX98357音频放大器模块 HS-F33-L | | REV: 1.0 |
| | Company: | Sheet: 1/1 |
| | Date: 2025-07-16 Drawn By: | |