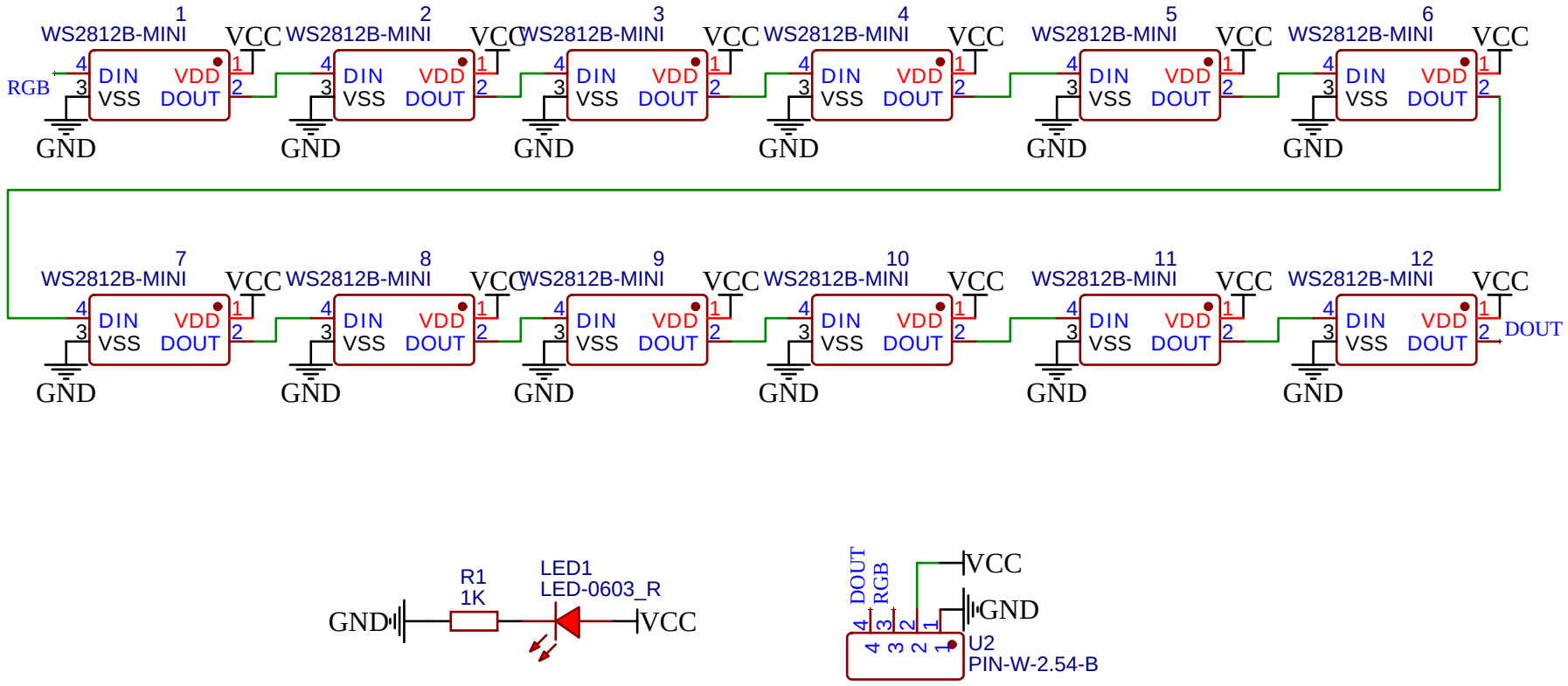

TITLE: 环形RGB-LED灯 HS-F12A		REV: 1.0
	Company:	Sheet: 1/1
	Date: 2021-09-25 Drawn By:	