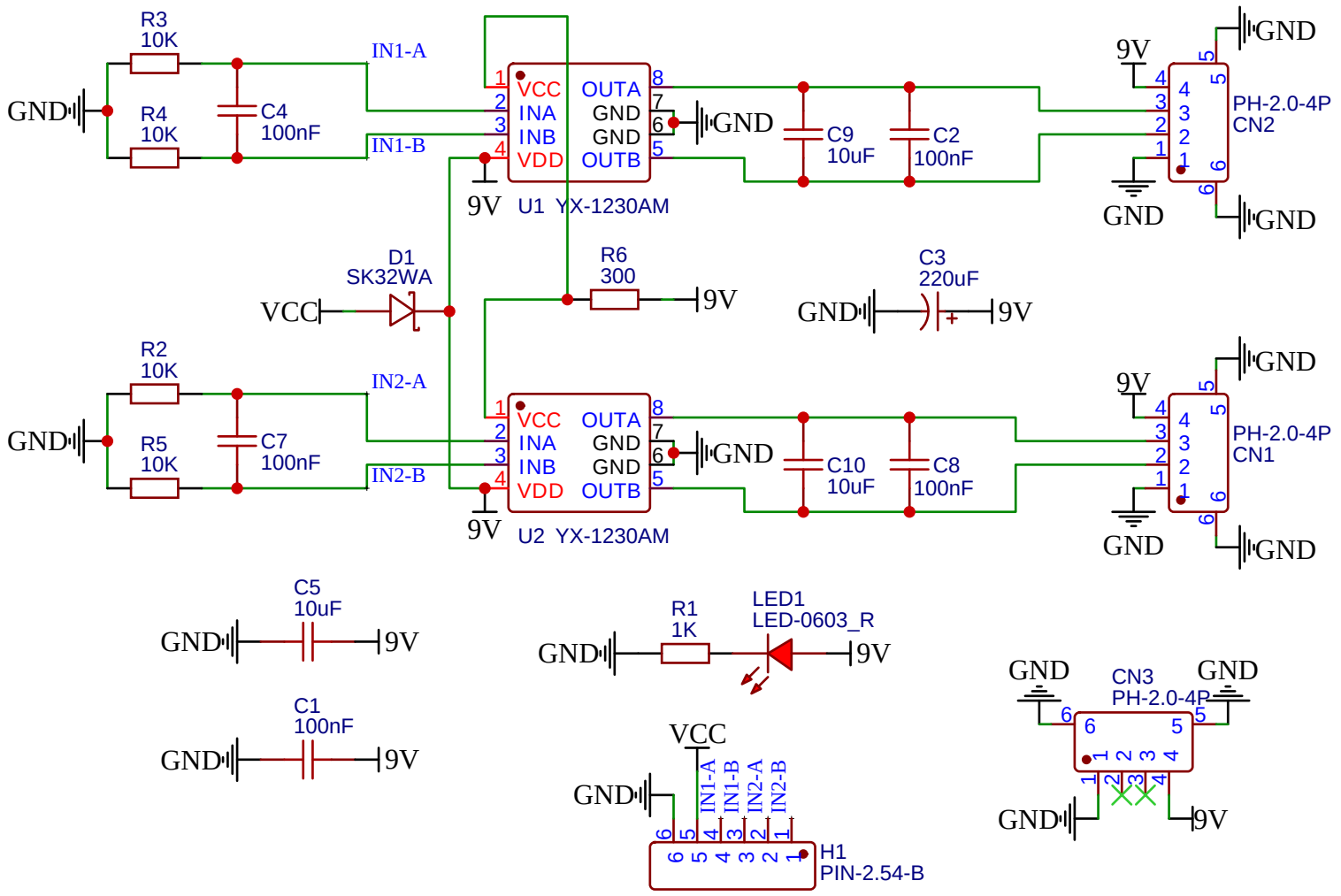

TITLE: Sheet_MOC双路电机驱动板 HS-F10L-B		REV: 1.0
	Company:	Sheet: 1/1
	Date: 2024-04-17 Drawn By:	